RPW ST

WEIGHING SYSTEM FOR STACKER TRUCK

HIGH ACCURACY: MAXIMUM ERROR 0.1% OF APPLIED WEIGHT, OPTION CLASS III

ACCURACY INDEPENDENT OF FLOOR CONDITION OR POSITION OF THE LOAD

SUITABLE FOR ALL BRANDS AND MODELS OF STACKER TRUCKS

EXTREMELY SOLID CONSTRUCTION: RESISTANT TO SHOCKS AND VIBRATIONS

WEIGHING SYSTEM PRACTICALLY MAINTENANCE FREE

STANDARD SPECIFICATIONS

- Weighing capacity equal to lifting capacity or limited by the demanded graduation
- Maximum inaccuracy 0.1%of applied weight
- Graduation: 1 kg
- Protection of load cells and cabling according to norm IP67
- Indicator protected according to IP65 norm

Dosing and filling going from containers, with a weighing system on the stacker

RAVAS

MODIFICATIONS OF STANDARD STACKER TRUCK DIMENSIONS

	Standard fork length	: 1150 mm
A	Fork length	: + 10 mm
B	Fork width	: + 20 mm
C	Minimum fork height	: + 5 mm
D	Maximum fork height	: + 5 mm
	Fork height scissor lift	: + 10 mm
E	Width over forks	: + 20 mm

Option: deviant fork length

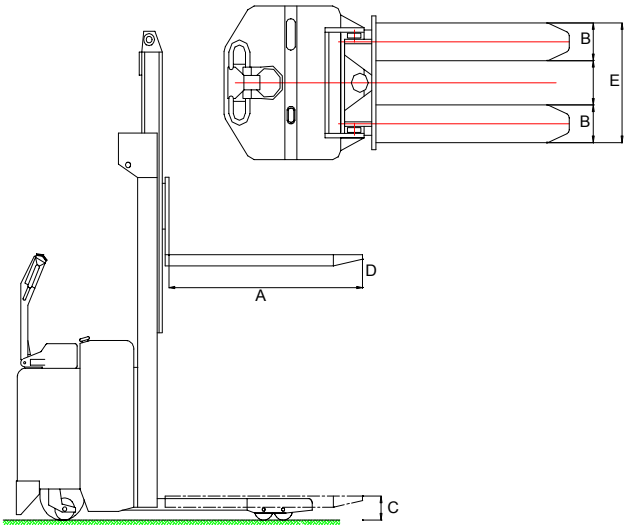

GRADUATION

Standard:	1 kg
Approved:	
1000 divisions	500 kg / 0.5 kg
	1000 kg / 1 kg
	2000 kg / 2 kg
1500 divisions	750 kg / 0.5 kg
	1500 kg / 1 kg
2000 divisions	1000 kg / 0.5 kg
	2000 kg / 1 kg

RAVAS INDICATORS

Every RAVAS Indicator has its own specific function. To every application corresponds a user-friendly indicator.

The RAVAS Indicators have been developed especially for mobile applications. Because of this, they have a robust construction and are resistant to shocks and vibrations. RAVAS Indicators are very compact, due to the use of SMD techniques. According to norm IP65, all Indicators are dust and waterproof, thus enabling use in the open.

For more information about RAVAS indicators, please see corresponding specification sheets

OPTIONS

- ❑ Approved for trade version according to certificate T2782, 2000 divisions maximum
- ❑ More accurate reading with smaller range (and with reduced capacity)
- ❑ More accurate reading with multi-range (except for approved for trade version) with which the graduation in determined by the load weighed (0.2 kg to 200 kg, 0.5 kg from 200 to 500 kg and 1 kg to 500 kg)
- ■ Printer for gross weight, net weight, tare weight with code, date and time
- ❑ Output for transport of data transfer
- ■ Radiographic data transfer
- ■ RAM card system for storage of weight information with identification codes and date/time on memory card
- ■ Identification systems
- ❑ Rotating indicator for reading display from all angles
- ❑ Stainless steel forks for more hygiene
- ■ Explosion proof version to be used in zone I

■ see specification sheet indicators / peripheral equipment.

RAVAS Europe B.V.
P.O. Box 2023
5300 CA Zaltbommel
The Netherlands
☎+31 - 418 - 51 52 20
🗎 +31 - 418 - 51 53 20
info@ravas.com
www.ravas.com

Ref.: RPWST/UK/971202/v6